WELCOME
TIC TAC TOE GAME

GROUP : 14

2023-2024

TIC TAC TOE GAME

- Tic-tac-toe is played on a three-by-three grid by two players, who alternately place the marks X and O in one of the nine spaces in the grid.
- We will play the game using push buttons and our gaming output will be shown in LEDs
- For a 3X3 Tic Tac to gam we will need nine switches all having the similar connection

METHODOLOGY

- Dual color LED’s should be in place which will indicate, RED for player1 and Green for player2.
- A player should not be able to override other player’s move. For example if player 1 selects the first cell, player 2 should not be able to select the same cell again.
- Player’s should have the ability to reset the game at any point.
- Once a player wins, the “result” state should be locked. That is, if player 1 wins first and then player2 makes a moves and satisfies the wining criterion – the output should show only “Player1” as the winner.
- If all the switches were pressed or if there is a draw situation – a separate LED should glow

* Tic Tac Toe Game *

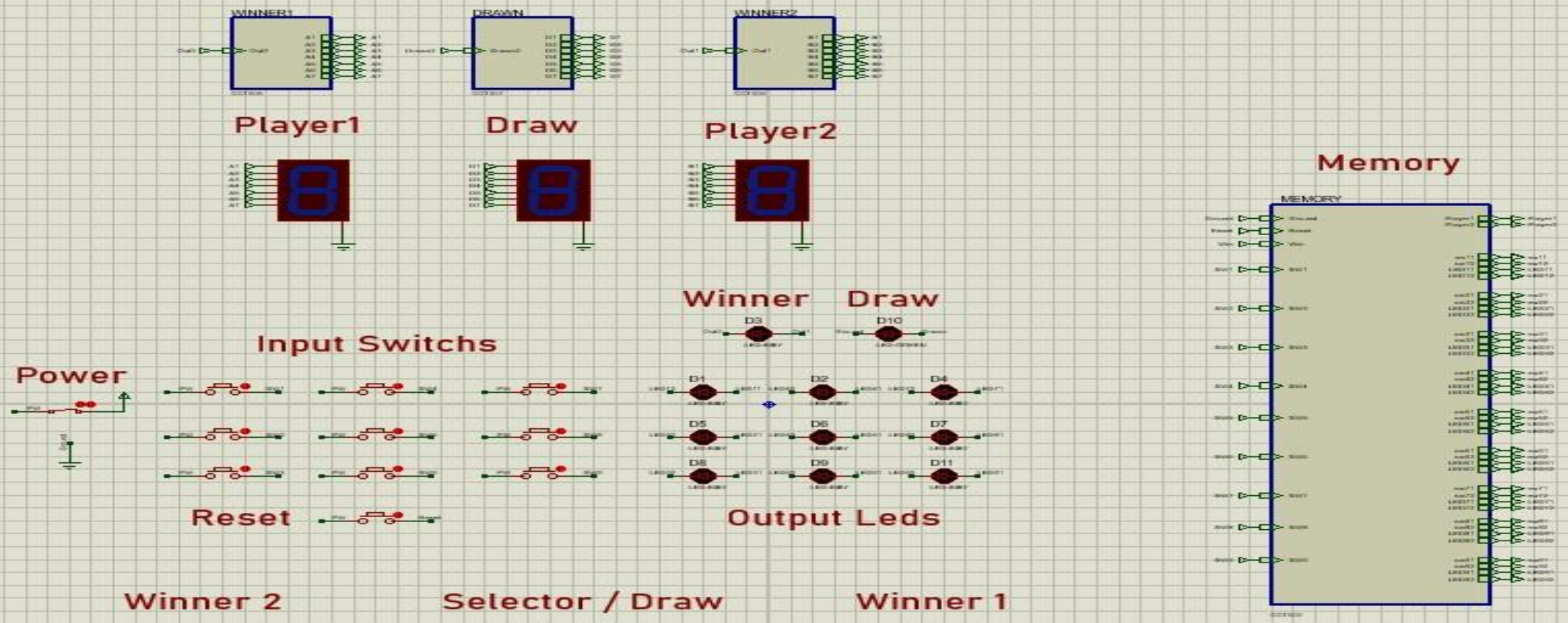

MEMORY (FLIP FLOP)

- Now the problem with using the push button is that it loses its data instantly that means just the moment we remove our finger from the push button the previous data will be lost , we are going to need some mechanism that will store the memory of the button for this purpose we will use this flip-flop combination these two flip flops will store the values of two sides of the LED , and this two flip-flops get positive edge of the clock and hence they store data now what will happen if a button is pressed twice in a row , the flip flops will get an other positive Edge and the light will change this problem allows a player two cheat in the game to prevent this problem we will need yet another flip flop which will store the memory that these two flip flops have had their positive Edge of the clock now no matter how many time we press this button the output of the flip flop will remain high as before and so the memory stored in these two flip flops will remain unharmed until the reset button is pressed this button controls the reset pins of the Flop when you press this button the game is restarted for nine buttons .

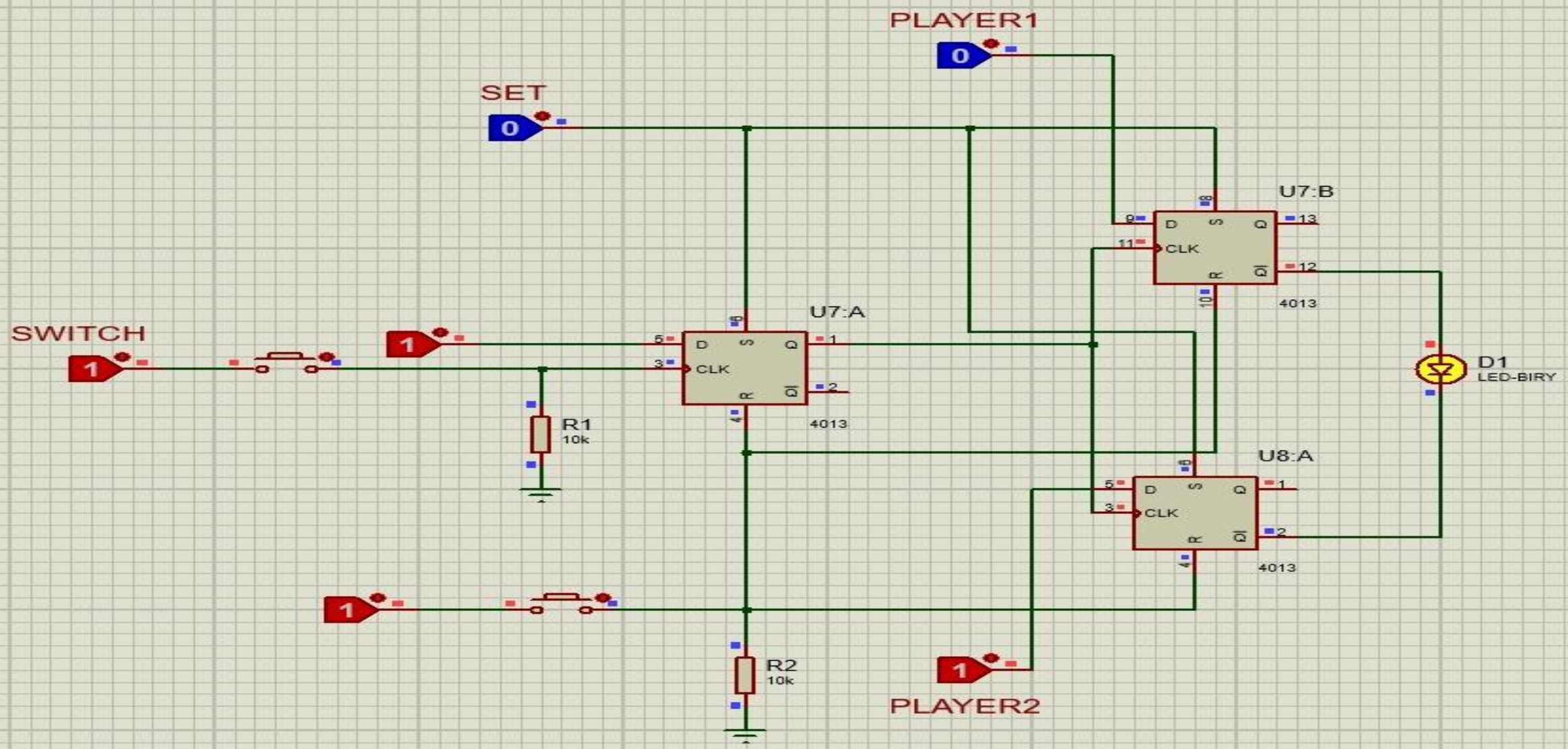
PLAYER1
0
SET
0
U7:B
D
S
Q
CLK
R
QI
4013
U7:A
D
S
Q
CLK
R
QI
4013
SWITCH
1
1
R1
10k
D1
LED-BIRY
U8:A
D
S
Q
CLK
R
QI
4013
1
R2
10k
1
PLAYER2

SELECTOR

- If any odd numbers of push buttons are pressed the output of the final exor gate will be one and for any even number of push buttons pressed the output of the exor gate will be zero and this is true for the whole system here is a NOT get at the output end which inverts the output of the zero that means each time the first player pushes a button the output of the circuit will be 1 and zero and for the second player the output will be zero and one we will use the output to light the Leds. But instead of taking the inputs directly from the button we will take the input from the flip flop circuit .

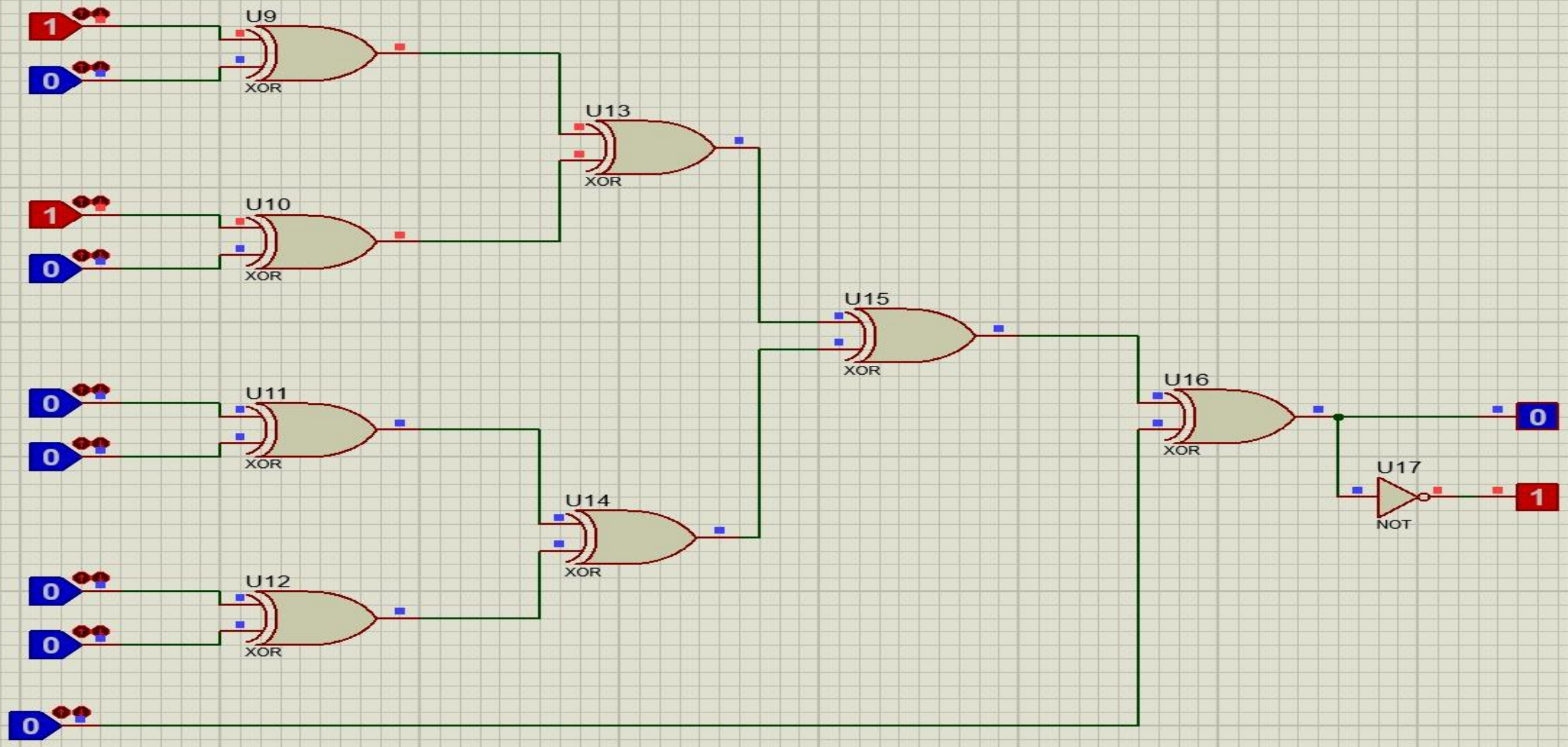
1
0
U9
XOR
U13
XOR
1
0
U10
XOR
U15
XOR
0
0
U11
XOR
U16
XOR
0
U17
NOT
1
U14
XOR
0
0
U12
XOR
0

WINNER

- Focus on finding a winner there are eight different ways to win a 3x3 tic tac toe game if any of this combination is achieved by a player the game must be ended there for this condition checking we implementation of condition checking this eight AND gets each has a winning combination as its for two players we will use this similar circuit twice this is the total circuit for winning LED this two condition checking segments inverted output will go to the side pins of the winner deciding LED if this player wins this inverted output will be zero and the LED will show that this player has one .

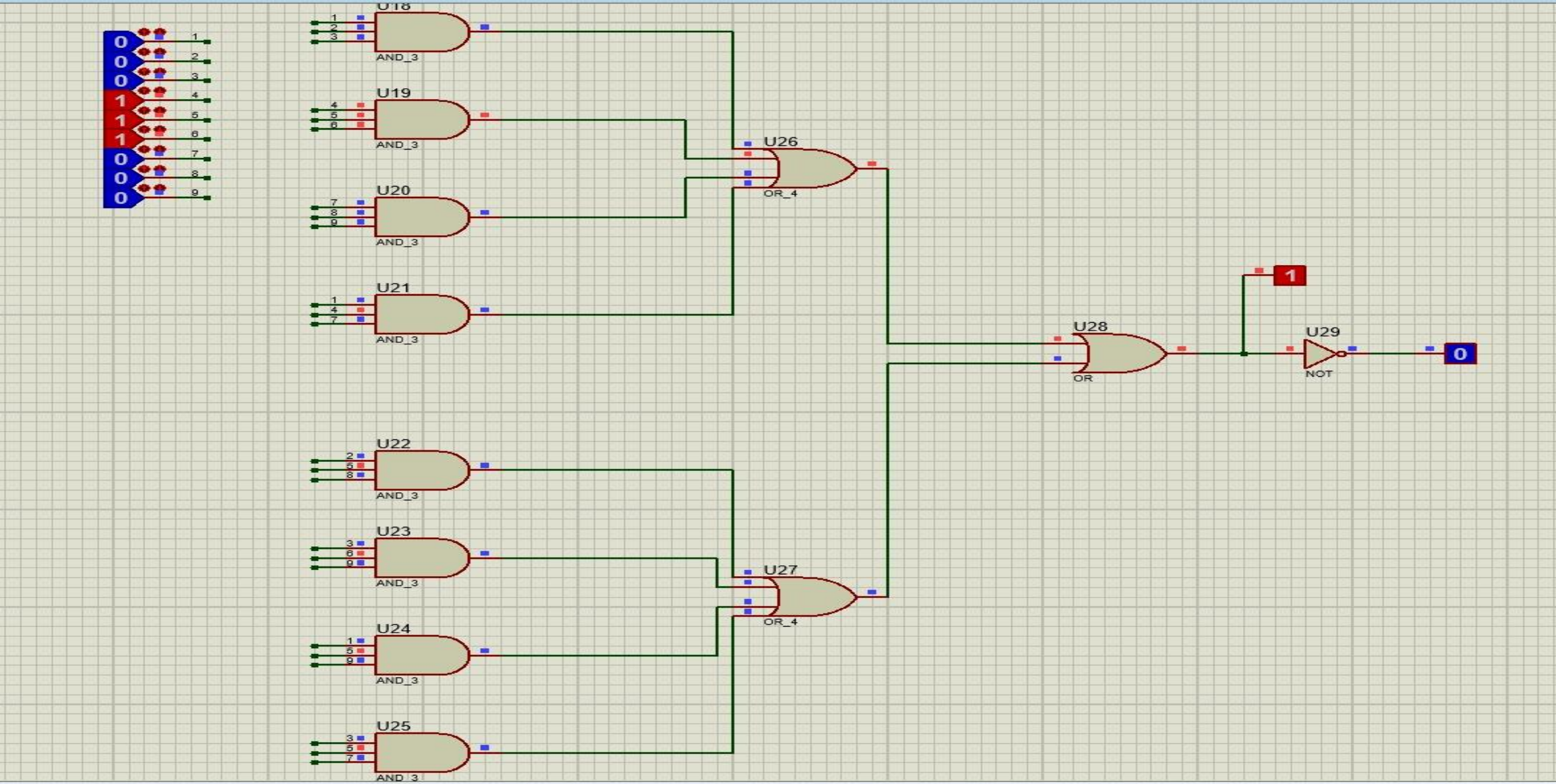
U18
U19
U20
U21
U22
U23
U24
U25
U26
U27
U28
U29
AND_3
OR_4
OR
NOT
1
0

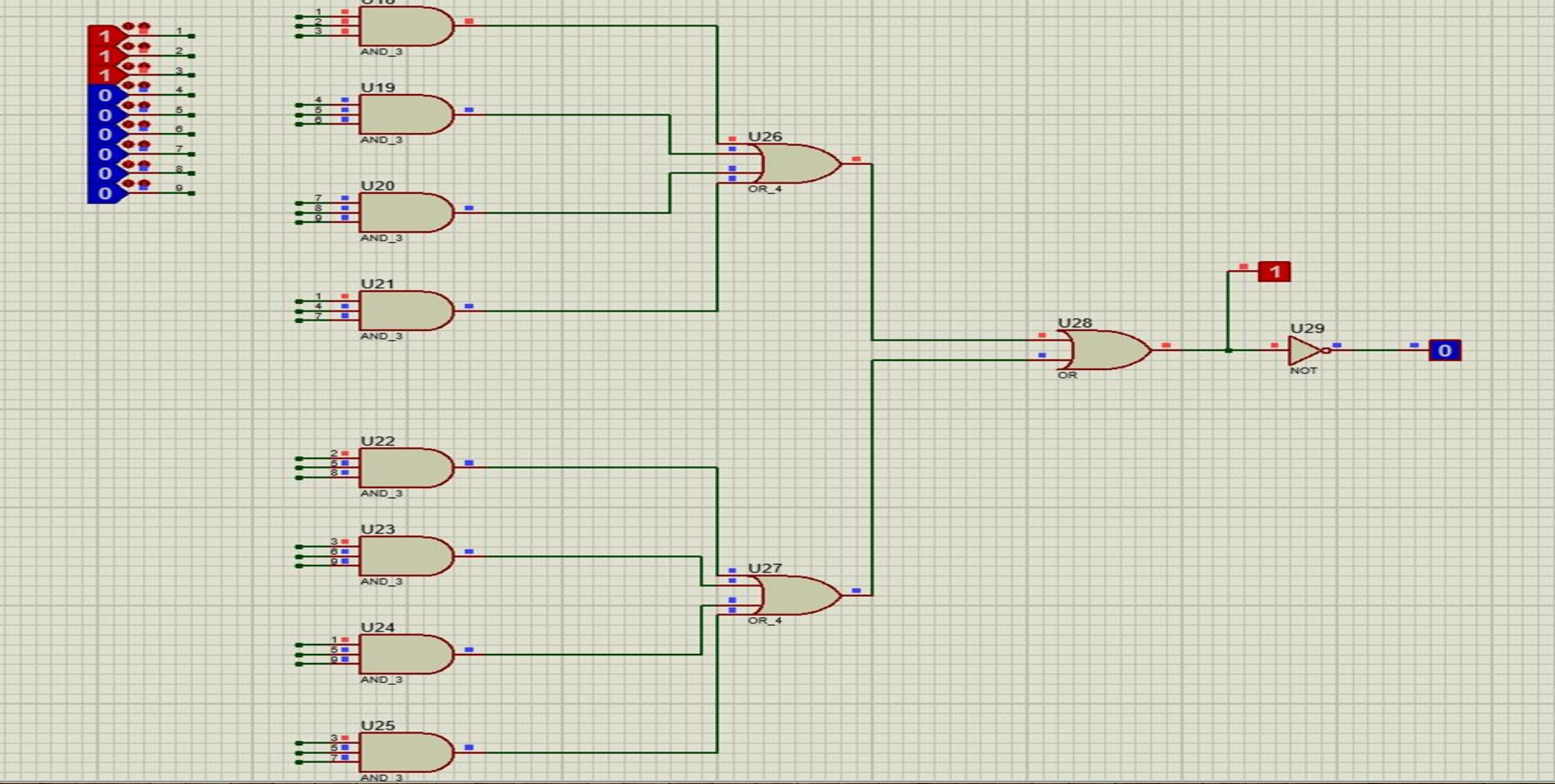
U18
AND_3
U19
AND_3
U20
AND_3
U21
AND_3
U22
AND_3
U23
AND_3
U24
AND_3
U25
AND_3
U26
OR_4
U27
OR_4
U28
OR
U29
NOT
1
0

DRAW

- Draw condition in a drone match all the buttons are pressed these three AND Gates take the input of the buttons and there is end gate takes the input from the winning LED if the match is drawn the output of the both And gate will be high hence the output of the final And gate will be high .Now it is very important that after a winner is found the game must be ended right a way that means when the player wins the remaining unpressed button should be blocked from interrupting the system we have to prevent other remaining switches from making any change in the circuit for doing this an additional AND gate is being used one input of this AND gate is coming from the winning LED and the other input will come from a switch now if a player wins the output of this AND gate will be zero .

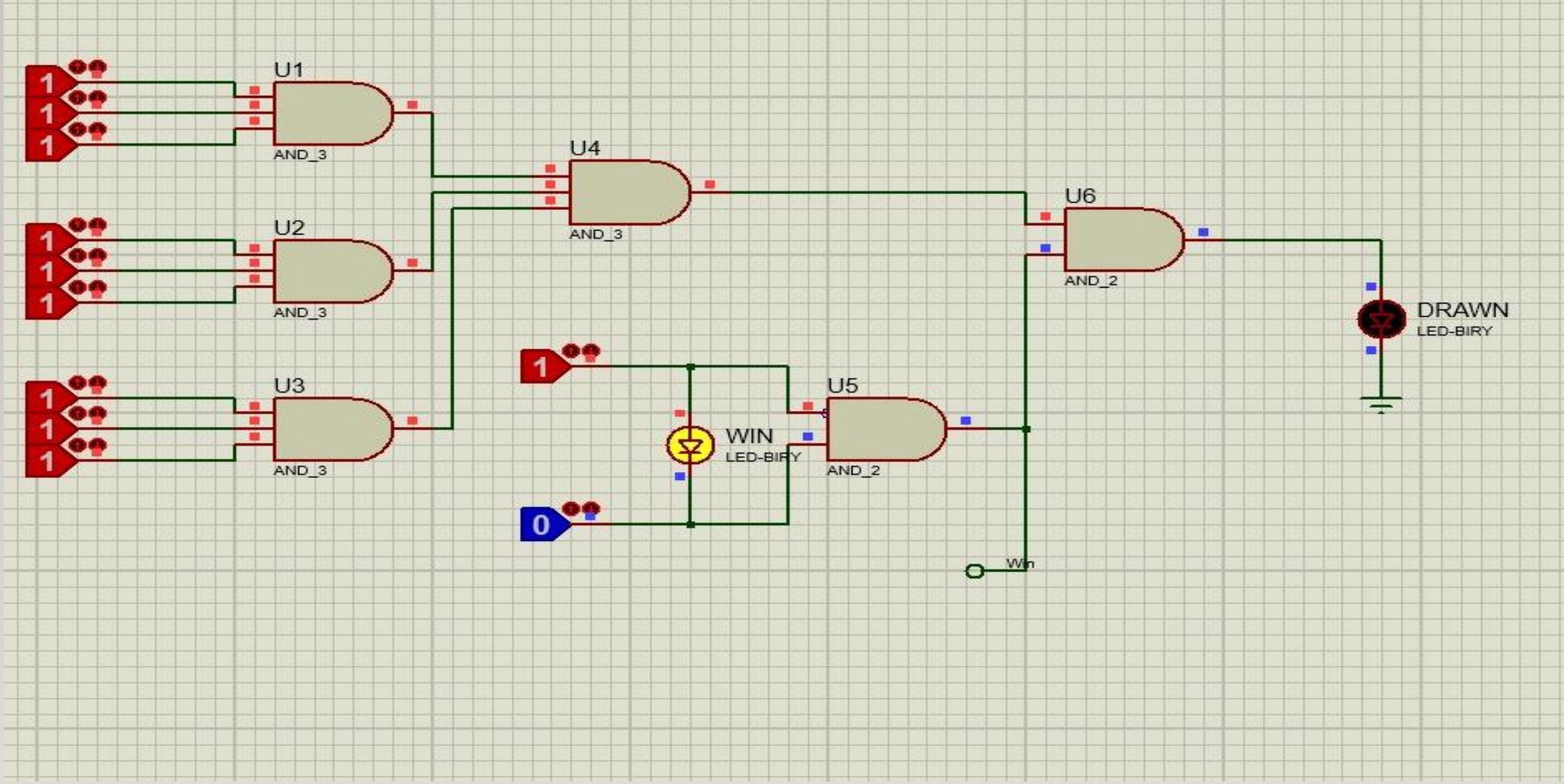
U1
AND_3
U2
AND_3
U3
AND_3
U4
AND_3
U5
AND_2
U6
AND_2
WIN
LED-BIRY
DRAWN
LED-BIRY
Win

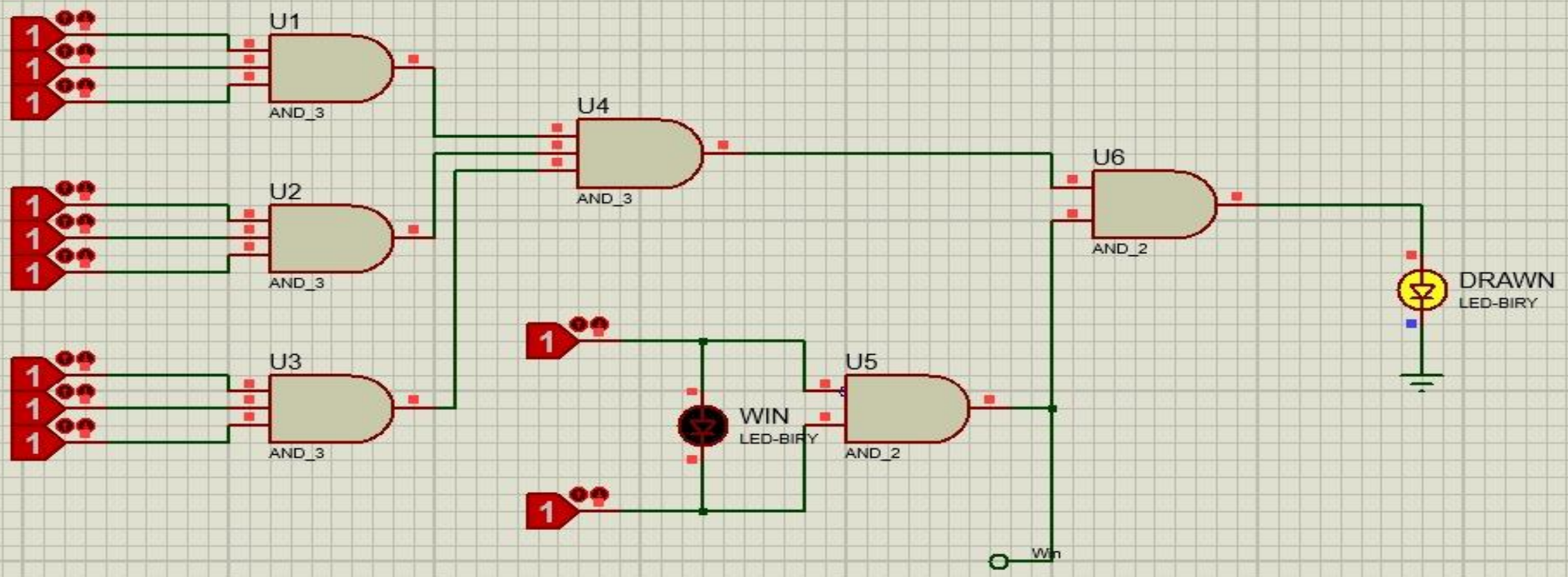
U1
AND_3
U2
AND_3
U3
AND_3
U4
AND_3
U5
AND_2
U6
AND_2
WIN
LED-BIRY
DRAWN
LED-BIRY
Win

ASYNCHRONOUS COUNTER J-K FLIP FLOP(0-9)

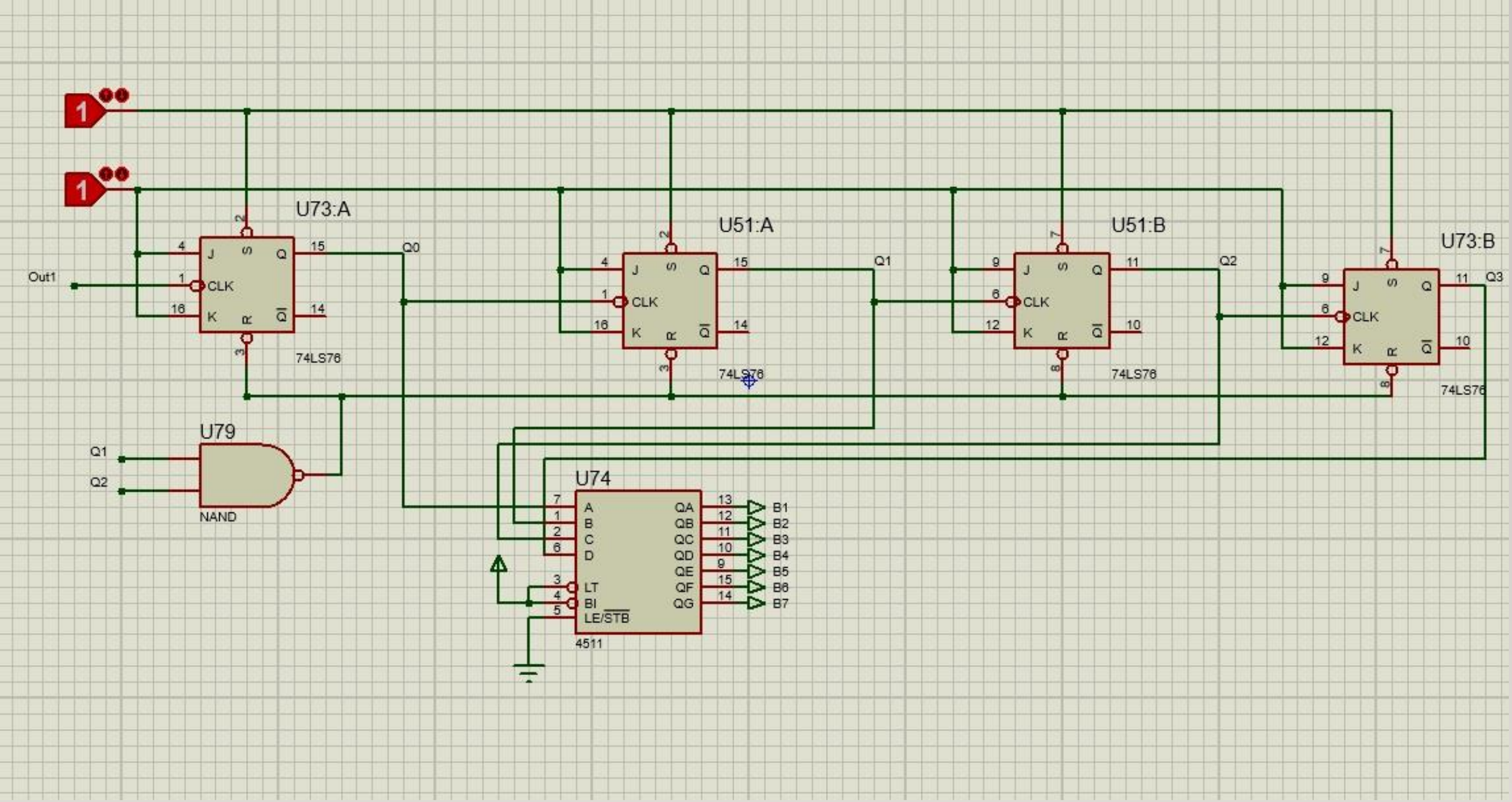
1
1
U73:A
Out1
J
S
Q
CLK
K
R
Q̄
74LS76
Q0
U51:A
74LS76
Q1
U51:B
74LS76
Q2
U73:B
74LS76
Q3
U79
Q1
Q2
NAND
U74
A
B
C
D
LT
BI
LE/STB
QA
QB
QC
QD
QE
QF
QG
B1
B2
B3
B4
B5
B6
B7
4511

THANKS